EE Optics Corporation

PCB3125D

Overview

PCB3125D is a 4-channel high speed amplifier.

Specification

Parameter	Symbol	Min	Typ	Max	Unit
Power Supply Input Voltage		11	12	13	V
Power Supply Input Power (Power supply input Voltage =12V)		2.0		3.9	W
Input Control Voltage	IN1, IN2, IN3, IN4	0		3.3	V
Output Voltage	Vout	0		120	V
Output Repetition Rate (full scale) (load capacitance <1nF)			25	50 (3dB)	kHz
Gain		36.5	37	37.5	
Rising/Falling time (0~120V)		5µs	10µs	15µs	

Absolute Maximum Rating

Power Supply Voltage 16V

Input Control Voltage IN1, IN2, IN3, IN4 .....-5V~ 16V

Output Voltage OUT1、OUT2、OUT3、OUT4 ..... -12~125V

Operating Temperature ..... -40°C to 85°C

Storage Temperature ..... -65°C to 85°C

Pin Out Diagram

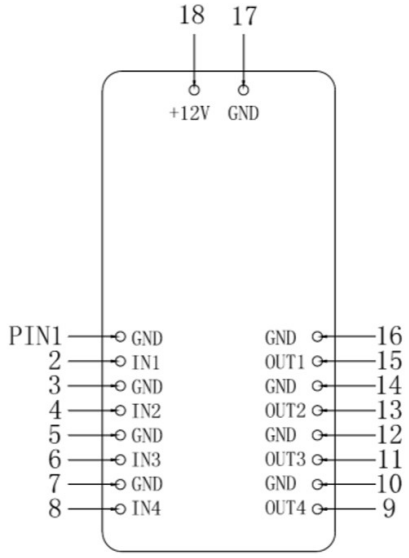

475 Quadrangle Ave. Unit C, Bolingbrook, IL 60440,USA
Phone: (217) 898-7163 Fax: (331) 757-5126
www.eeoptics.com

EE Optics Corporation

PCB3125D

Packaging Dimension (unit: mm)

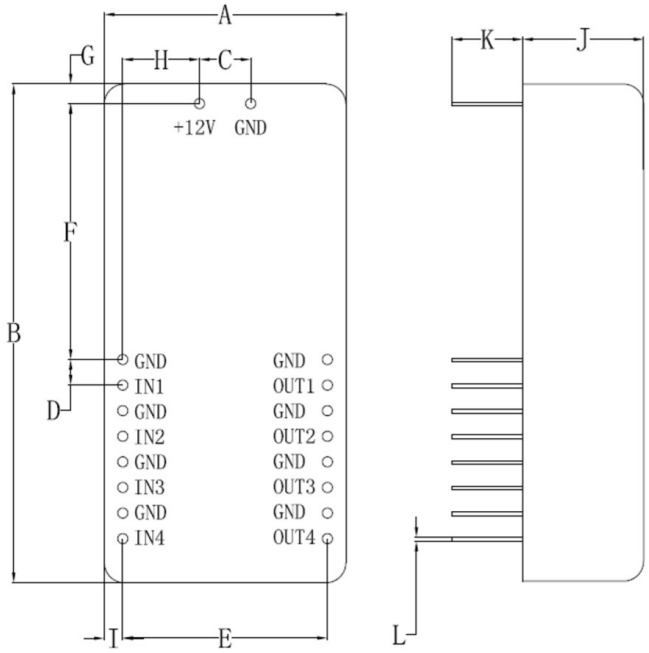

DIM	INCHES		MILLIMETERS	
	MIN	MAX	MIN	MAX
A	1.000	1.008	25.4	25.6
B	2.004	2.008	50.9	51.0
C	0.2		5.08	
D	0.1		2.54	
E	0.8		20.32	
F	1.0		25.4	
G	0.106	0.114	2.705	2.905
H	0.3		7.62	
I	0.106	0.114	2.705	2.905
J	0.492	0.496	12.5	12.6
K	0.236	0.315	6	8
L	0.020		0.5	

475 Quadrangle Ave. Unit C, Bolingbrook, IL 60440,USA
Phone: (217) 898-7163 Fax: (331) 757-5126
www.eeoptics.com